# EXPERIMENT NO.1

**TITLE:** To estimate Numerical Aperture (N.A) of given MMSI optical fiber.

**AIM:** Study and measure numerical aperture of an optical fibre using different light sources.

**APPARATUS:** 1) Benchmark fibre optic kit

2) Kashtronica fibre optic kit

3) Plastic fibre of 1mm diameter

4) IR LED (850nm)

5) LED (650nm) [visible light]

**THEORY:** Write notes on the basic fibre structure.

N.A. and importance of cladding

Draw the ray diagram for N.A. calculations and derive the equation.

=

**PROCEDURE:**

**Using IR Sources-**

1) Switch on power supply.

2) Adjust the fiber length

3) Take reading on vertical scale as reference reading.

4) Adjust distance L between fiber and light source to 0.5mm using knobs for vertical movement.

5) Adjust fiber in horizontal position to get max voltmeter reading and take vernier scale reading.

6) Adjust fiber at a point when voltmeter reading is 0.5times the maximum reading. This is D1.

7) Take the reading 'D2'in the opposite direction.

8) Repeat the procedure at L=15mm and 10mm.

9) Calculate average value of NA.

**Using Visible Light Source-**

1) Connect one end of the fiber into NA measurement unit. Adjust fiber such that tip is 10mm from screen.

2) Gently tighten screw to hold fiber firmly in place.

3) Connect other end of fiber to LED2 (650nm).

PROGRESSIVE EDUCATION SOCIETY
Pune - 5
Modern College of Engineering
Pune - 5

4) Fiber will project a circular patch of red light onto screen.

5) Let d be the distance between fiber tip and screen.

6) Measure circular diameter of patch in two perpendicular directions.

7) Repeat for different values of 'd'.

8) Calculate average value of N.A.

**CALCULATIONS:**

I) **IR LED Source-**

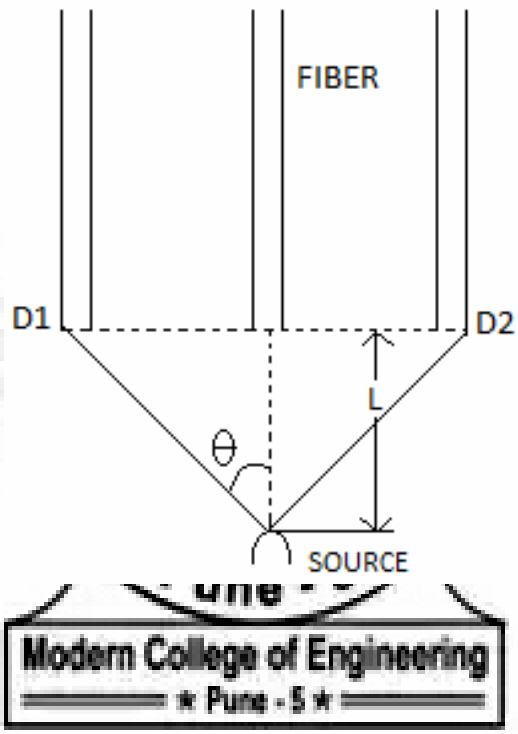


$D=D_2-D_1$

$\tan\theta =$

$\theta=$

N.A.=Sinθ=Sin[]

| Sr.No. | D2 | D1 | D/2 | L | θ | N.A. |
|---|---|---|---|---|---|---|
| 1. | | | | | | |
| 2. | | | | | | |
| 3. | | | | | | |

**II) VISIBLE LIGHT SOURCE-**

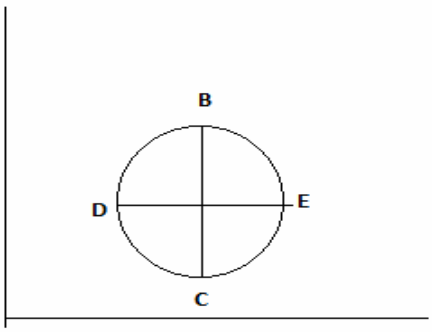


N.A. = Sinθ =

**OBSERVATIONS:-**

| Sr.No. | d | BC | DE | x | N.A. |
|---|---|---|---|---|---|
| | | | | | |
| | | | | | |
| | | | | | |

**CONCLUSION:**

**QUESTIONS:-**

1. Discuss propagation of light through an optical fiber using ray theory. Explain Meridional and skew ray propagation.